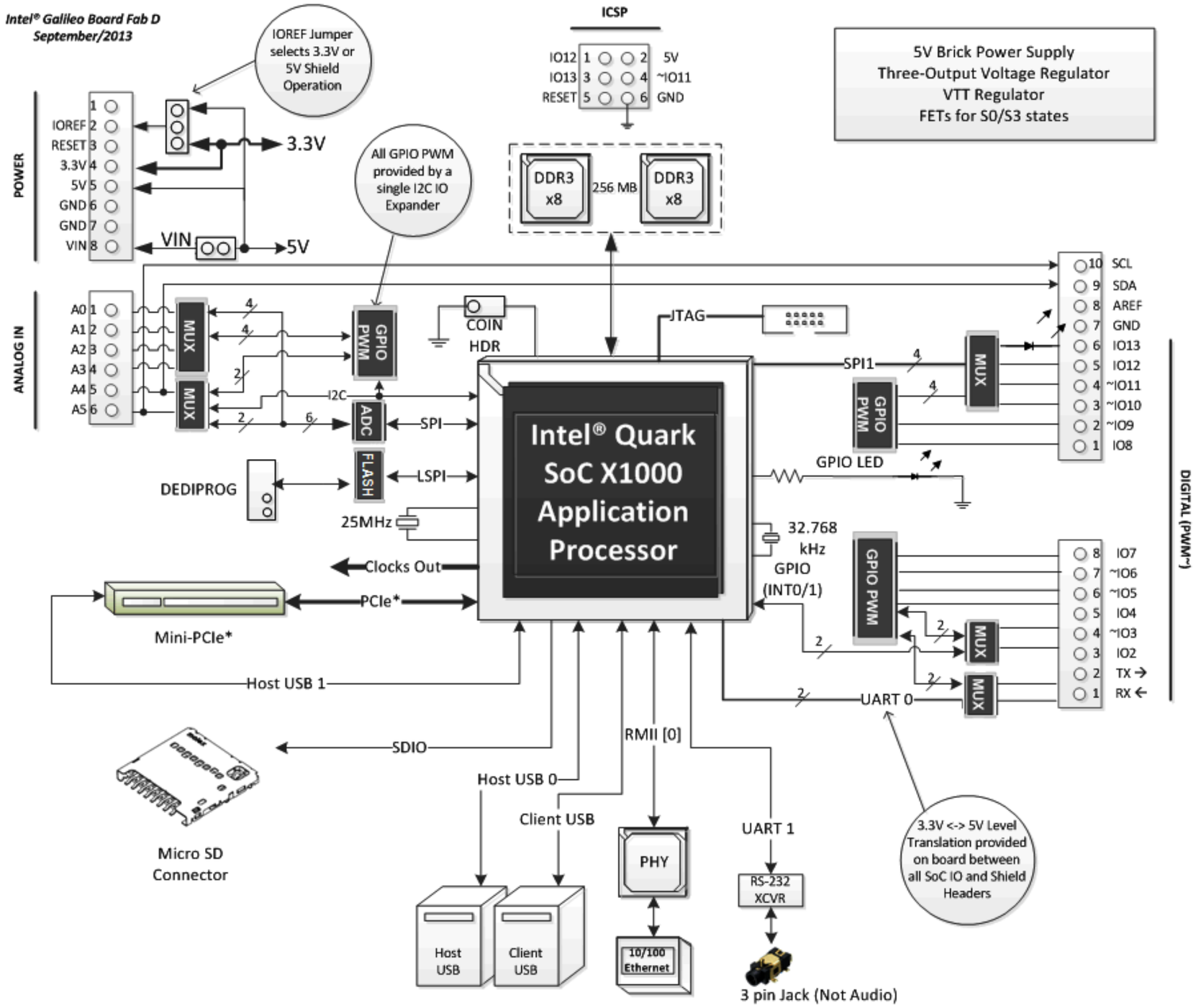

INTEL CORPORATION 2111 NE 25TH AVENUE HILLSBORO OR 97124	DOCUMENT NUMBER: G87171
TITLE: GALILEO SYSTEM BLOCK DIAGRAM	REV: 1.0 SHEET 4 OF 27

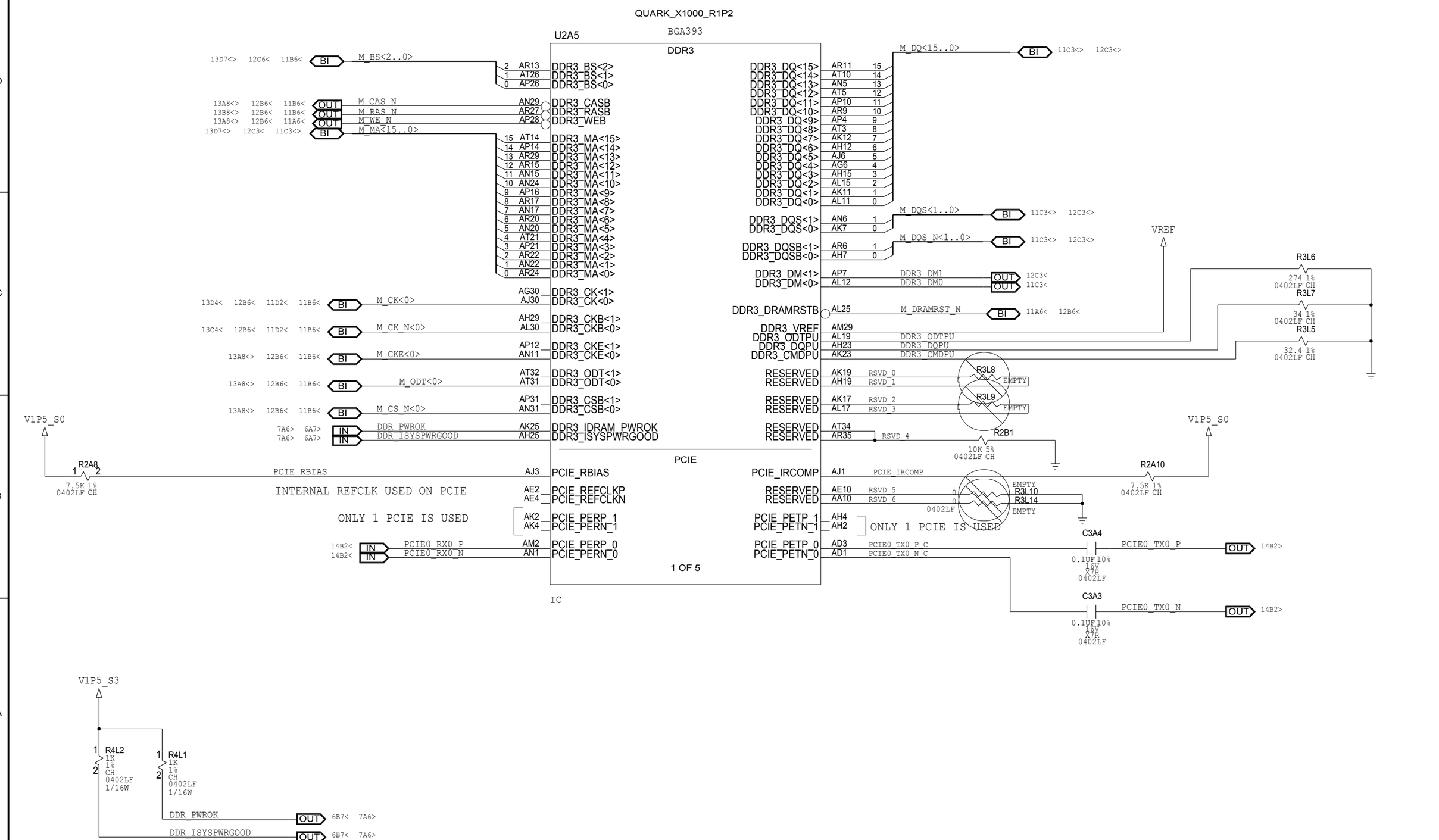

INTEL CORPORATION 2111 NE 25TH AVENUE HILLSBORO OR 97124	DOCUMENT NUMBER: G87171
TITLE: GALILEO QUARK DDR3 & PCIE	REV: 1.0 — SHEET 5 OF 27

Order Number: 329682-001US

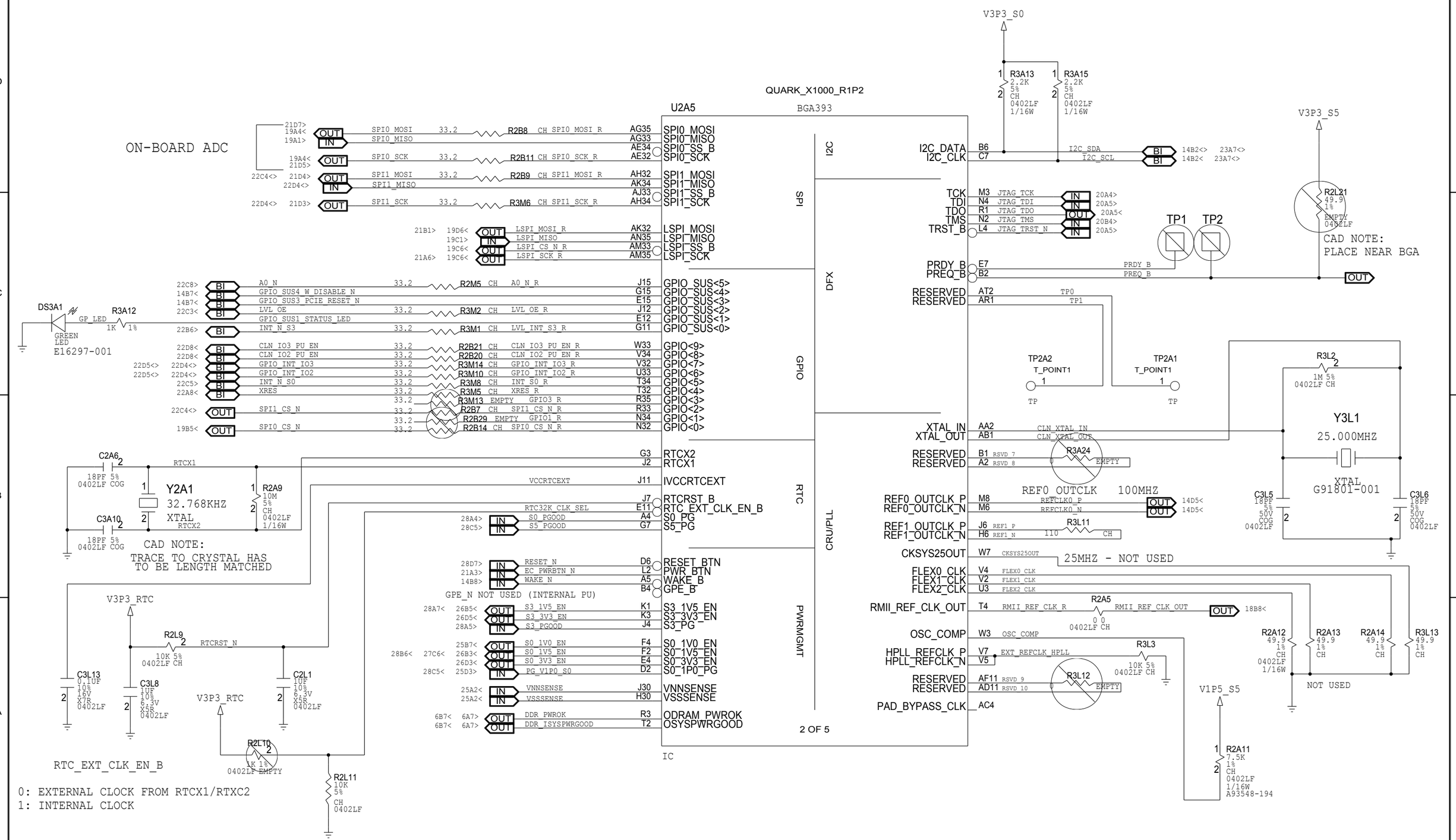

INTEL CORPORATION 2111 NE 25TH AVENUE HILLSBORO OR 97124	DOCUMENT NUMBER: G87171
TITLE: GALILEO QUARK GPIO	REV: 1.0 SHEET 6 OF 27

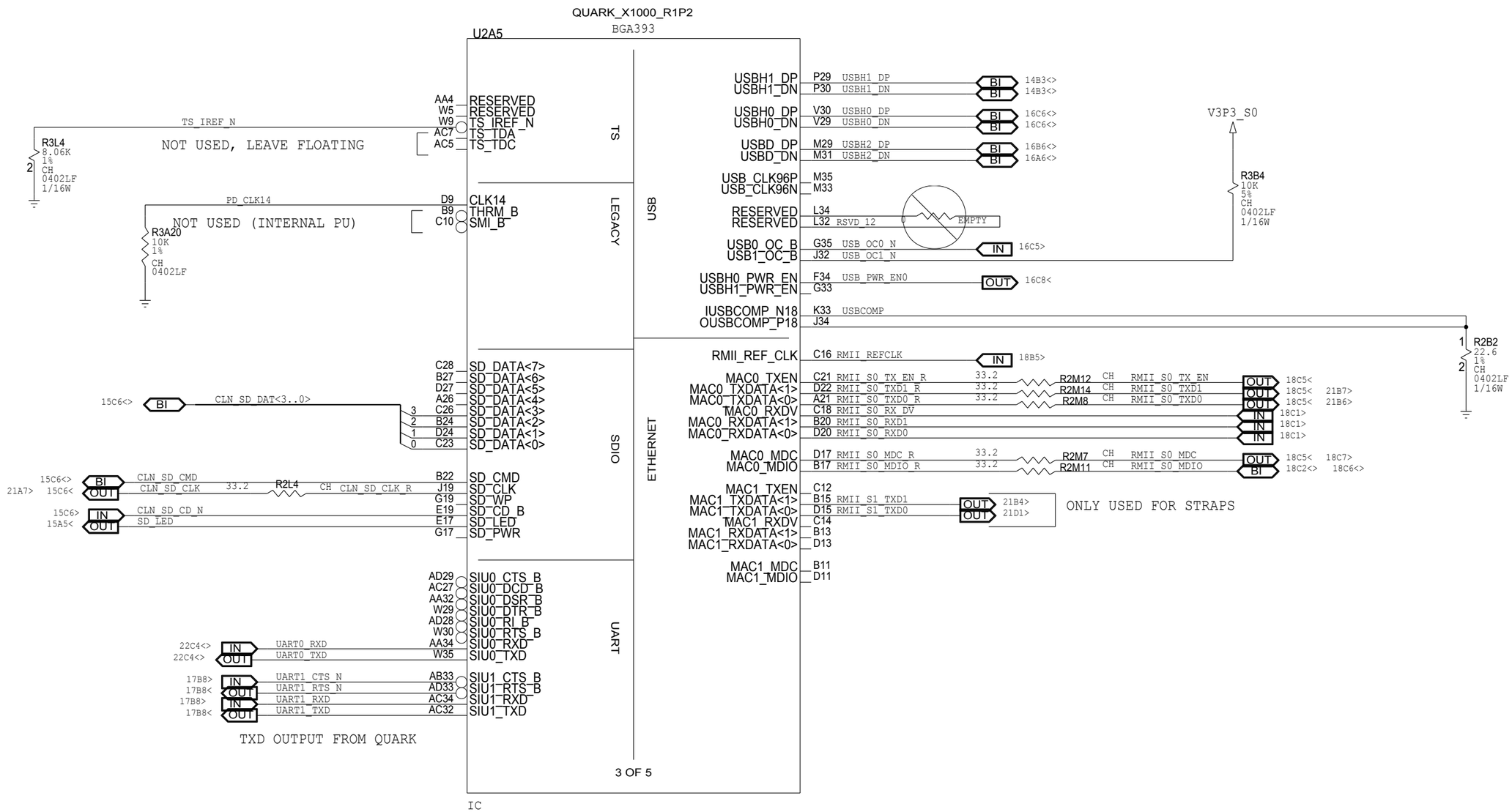

INTEL CORPORATION 2111 NE 25TH AVENUE HILLSBORO OR 97124	DOCUMENT NUMBER: G87171
TITLE: GALILEO QUARK MISC	REV: 1.0 SHEET 7 OF 27

Order Number: 329682-001US

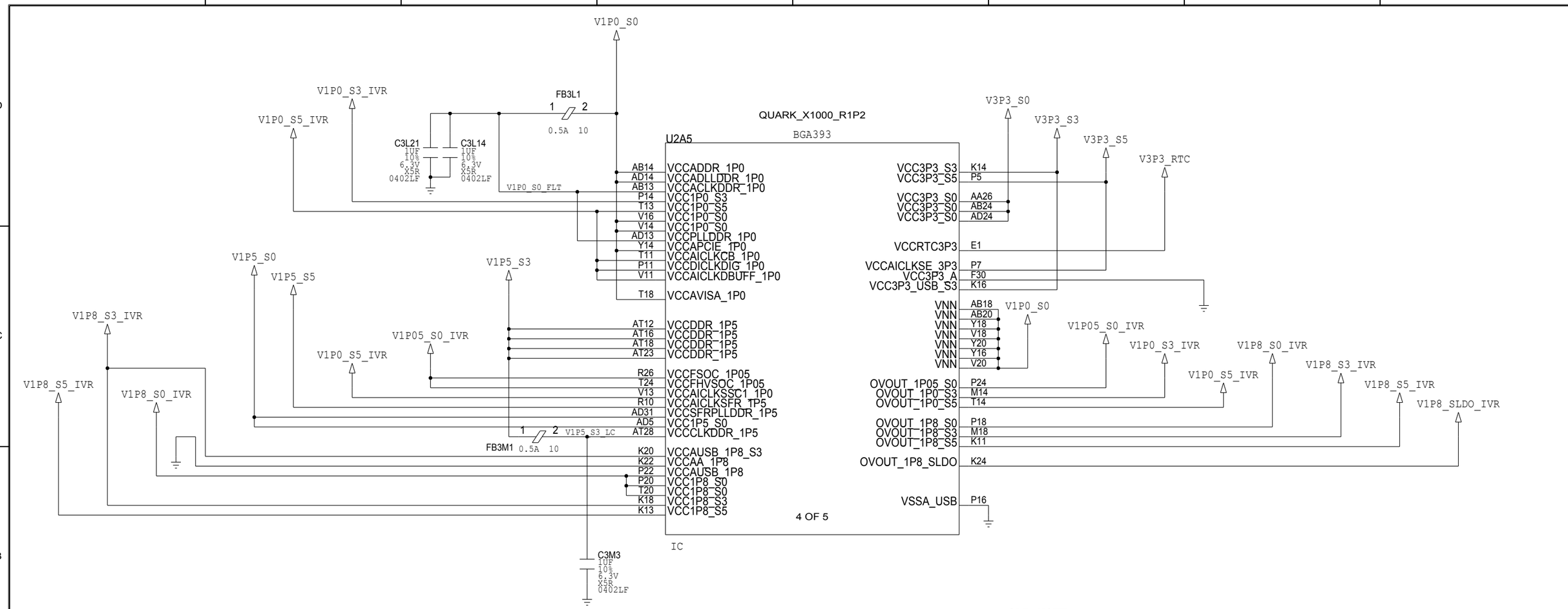

CAD NOTE
PLACE AS CLOSE AS POSSIBLE TO SIGNAL VIAS

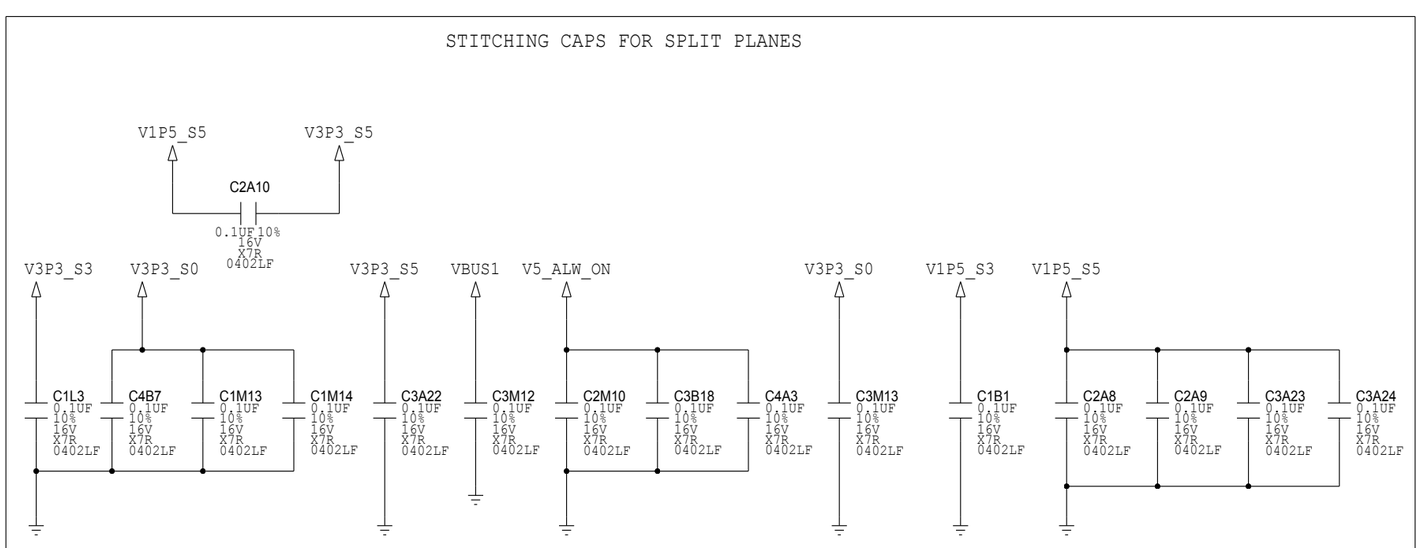

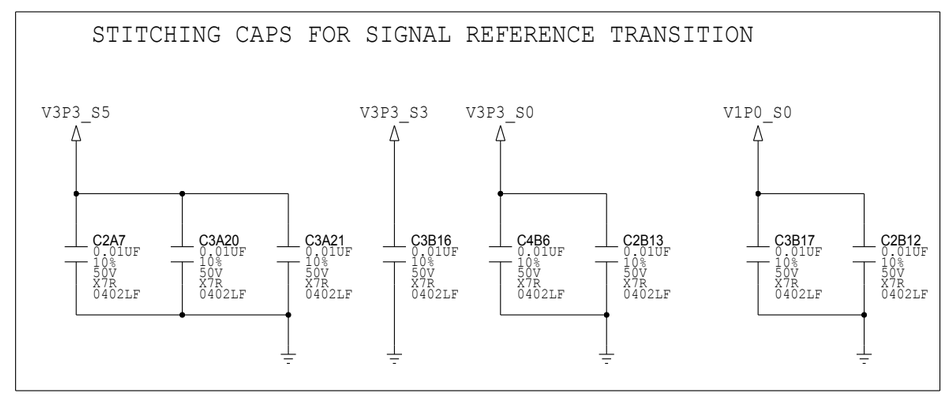

INTEL CORPORATION 2111 NE 25TH AVENUE HILLSBORO OR 97124	DOCUMENT NUMBER: G87171	
TITLE: GALILEO QUARK POWER	REV: 1.0	SHEET 8 OF 27

Order Number: 329682-001US

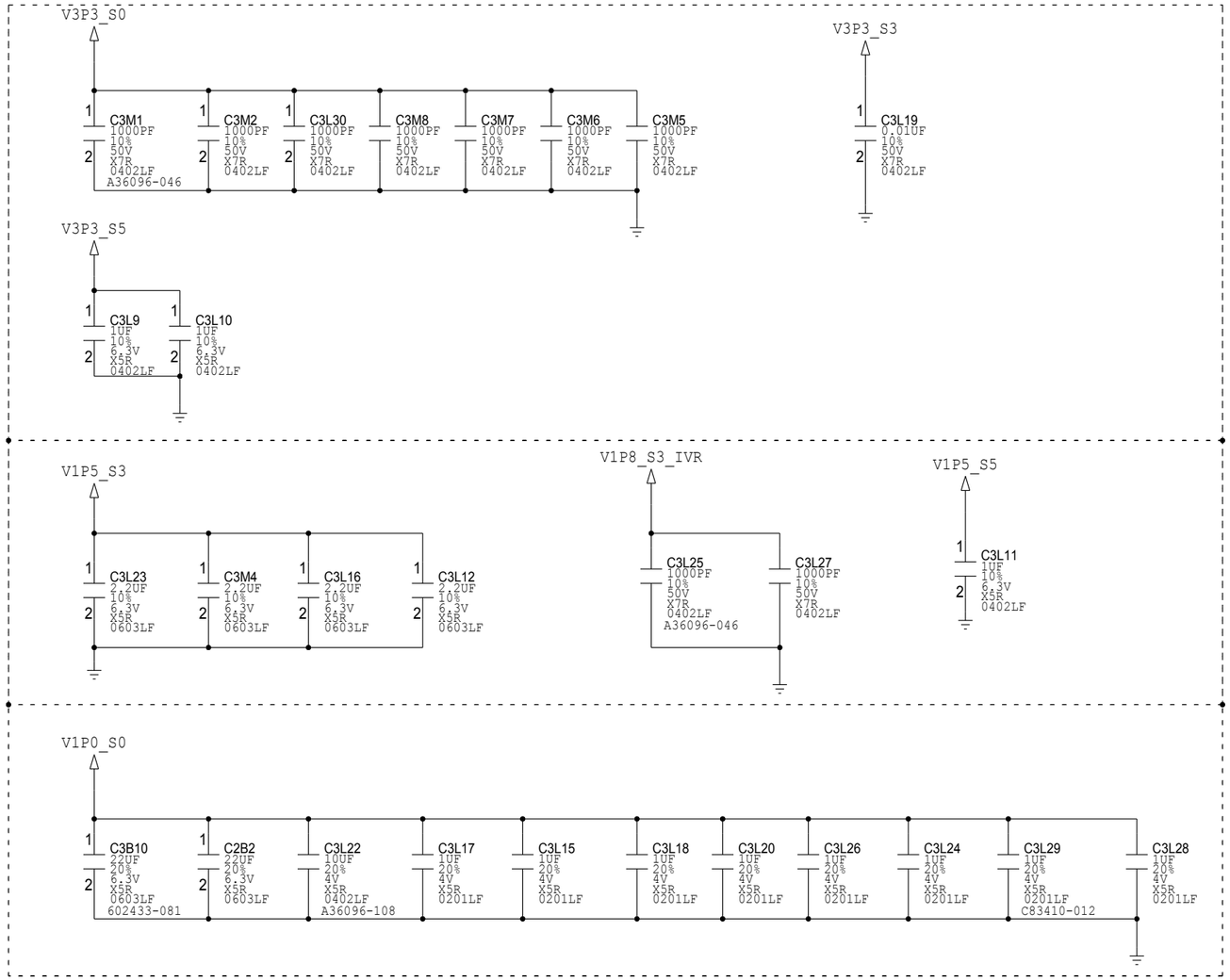

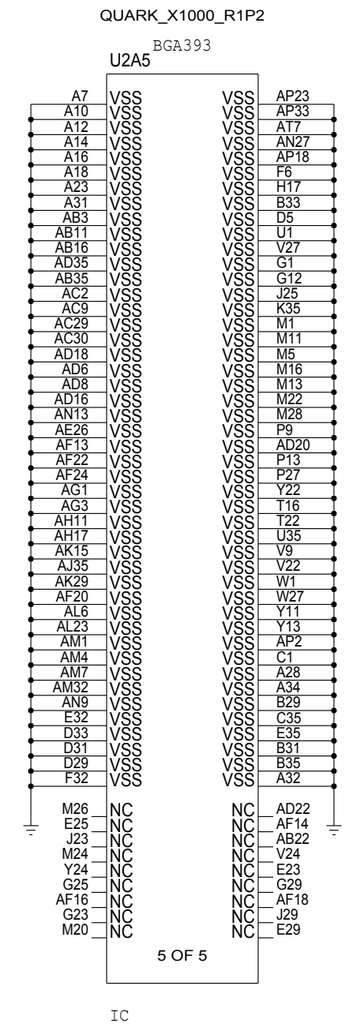

INTEL CORPORATION 2111 NE 25TH AVENUE HILLSBORO OR 97124	DOCUMENT NUMBER: G87171
TITLE: GALILEO QUARK DECOUPLING	REV: 1.0 SHEET 9 OF 27

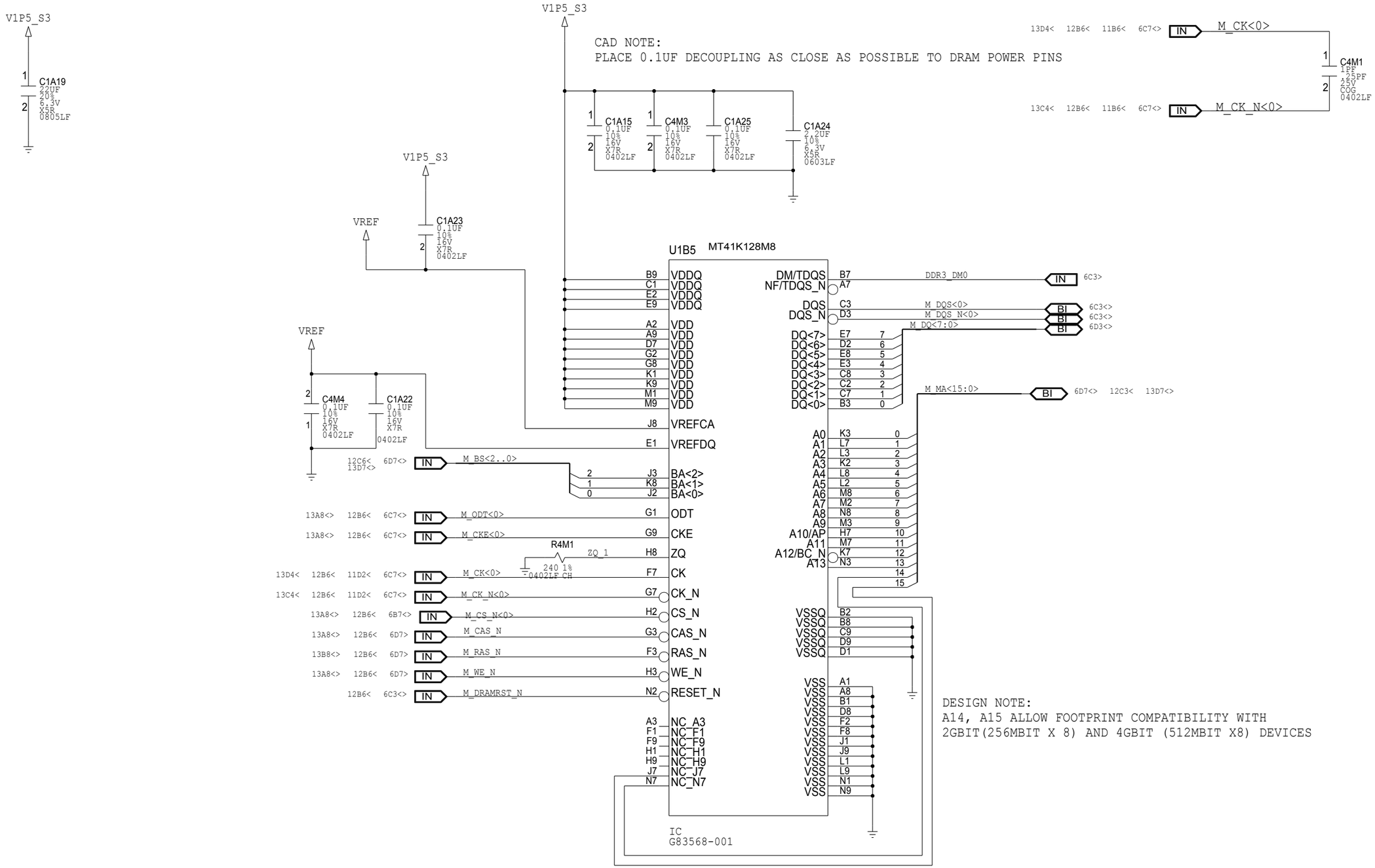

DESIGN NOTE:
A14, A15 ALLOW FOOTPRINT COMPATIBILITY WITH
2GBIT(256MBIT X 8) AND 4GBIT (512MBIT X8) DEVICES

SDRAM 1

INTEL CORPORATION 2111 NE 25TH AVENUE HILLSBORO OR 97124	DOCUMENT NUMBER: G87171
TITLE: GALILEO SDRAM 1	REV: 1.0 SHEET 10 OF 27

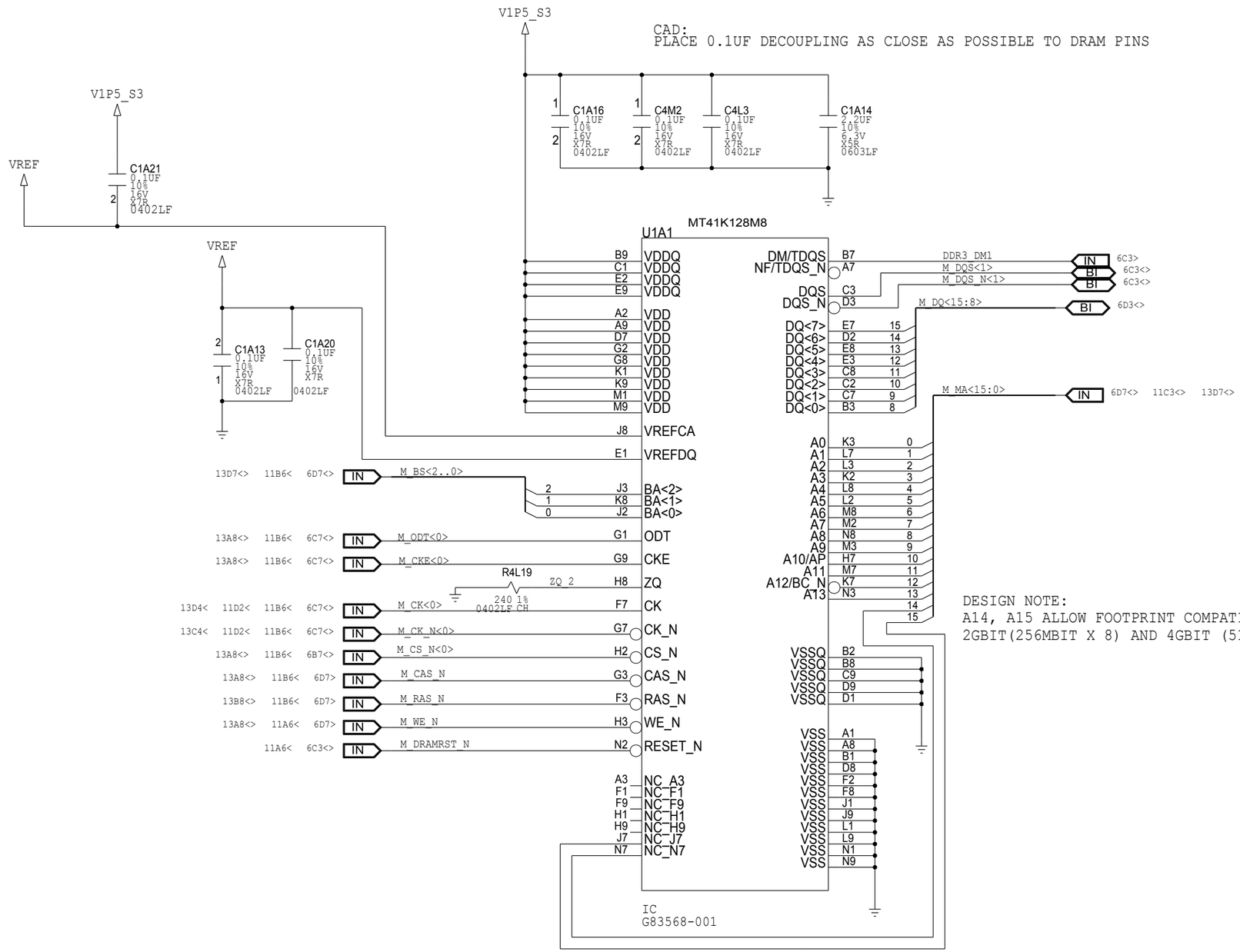

DESIGN NOTE:
A14, A15 ALLOW FOOTPRINT COMPATIBILITY WITH
2GBIT(256MBIT X 8) AND 4GBIT (512MBIT X8) DEVICES

SDRAM 2

INTEL CORPORATION 2111 NE 25TH AVENUE HILLSBORO OR 97124	DOCUMENT NUMBER: G87171
TITLE: GALILEO SDRAM 2	REV: 1.0 SHEET 11 OF 27

Order Number: 329682-001US

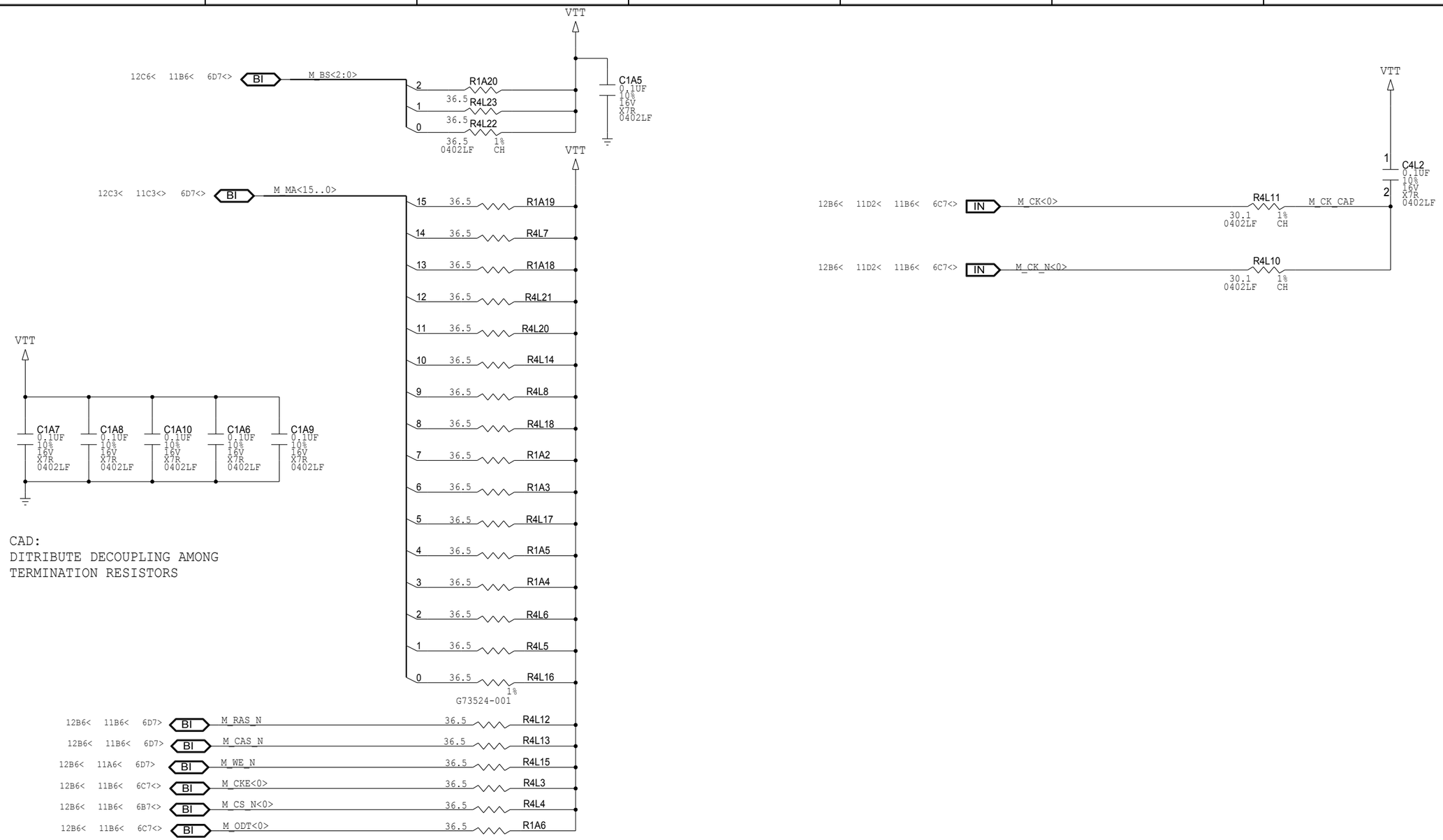

INTEL CORPORATION 2111 NE 25TH AVENUE HILLSBORO OR 97124	DOCUMENT NUMBER: G87171
TITLE: GALILEO SDRAM TERMINATION	REV: 1.0 SHEET 12 OF 27

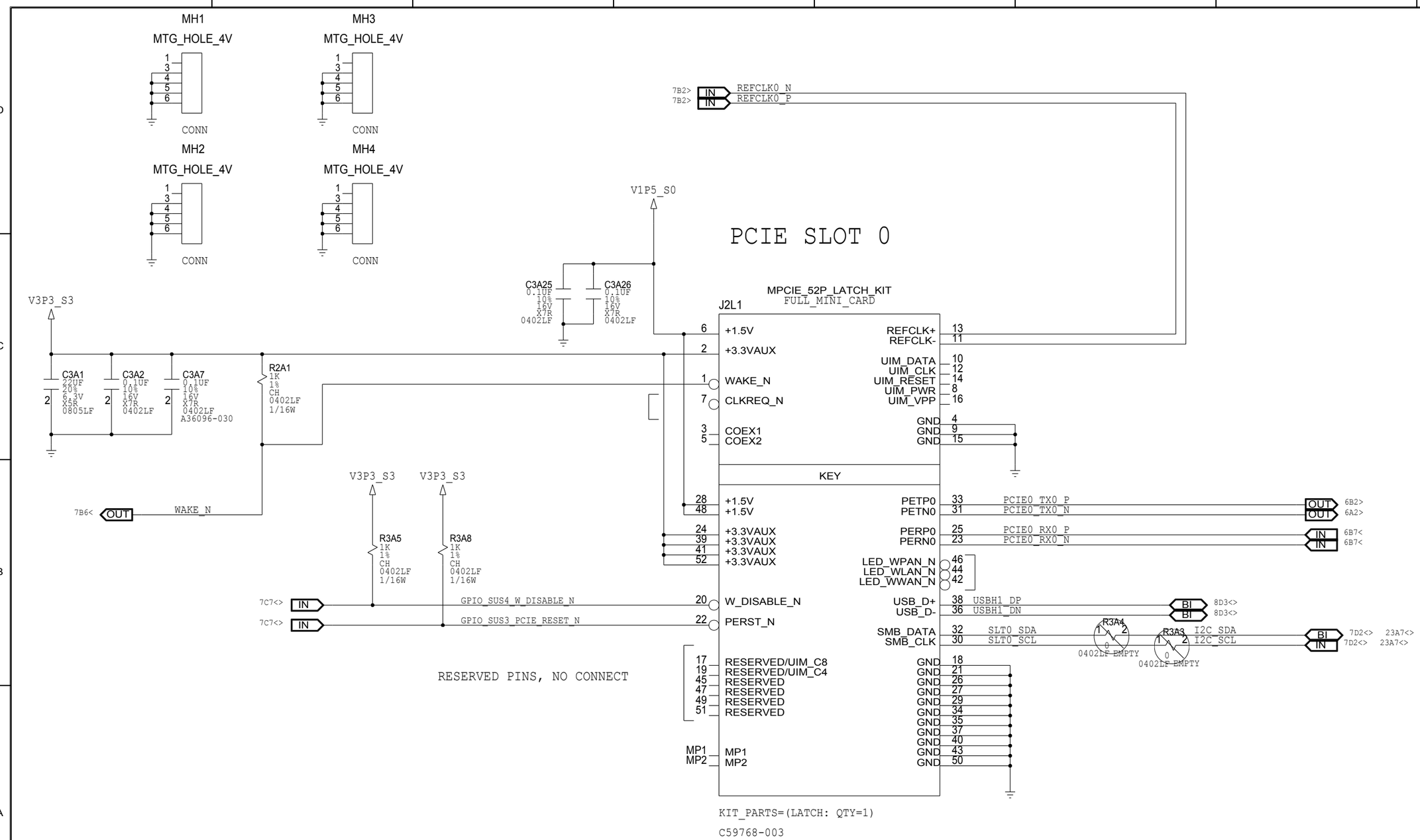

INTEL CORPORATION 2111 NE 25TH AVENUE HILLSBORO OR 97124	DOCUMENT NUMBER: G87171
TITLE: GALILEO MINI PCIE CONNECTOR	REV: 1.0 SHEET 13 OF 27

Order Number: 329682-001US

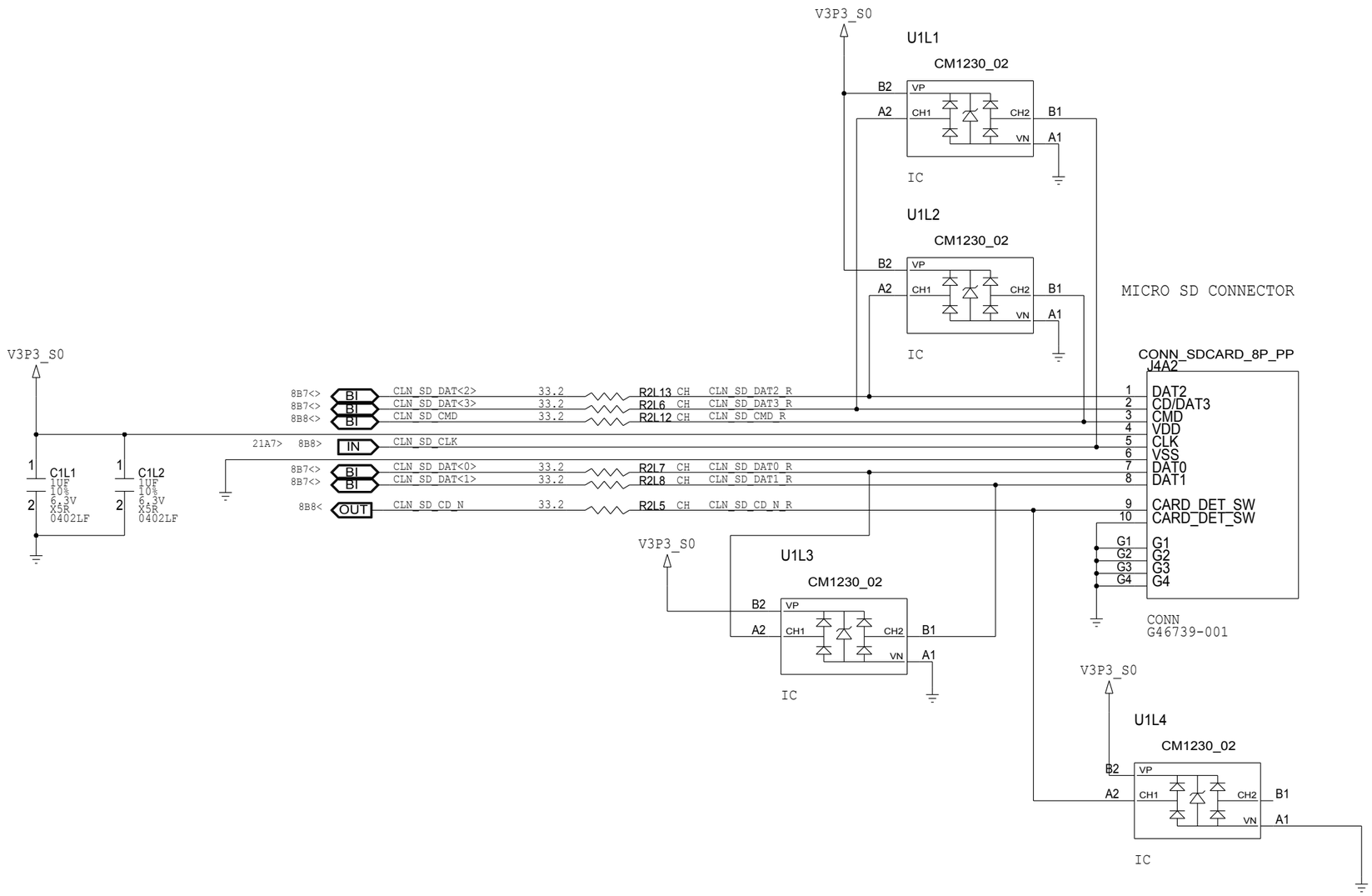

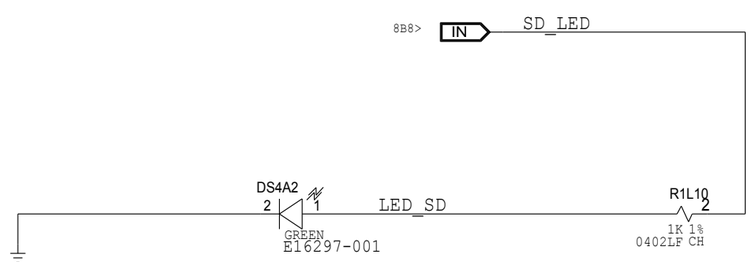

CAD NOTE:
PLACE SD LED CLOSE TO THE SDIO CONN

INTEL CORPORATION 2111 NE 25TH AVENUE HILLSBORO OR 97124	DOCUMENT NUMBER: G87171	
TITLE: GALILEO MICRO SD CONNECTOR	REV: 1.0	SHEET 14 OF 27

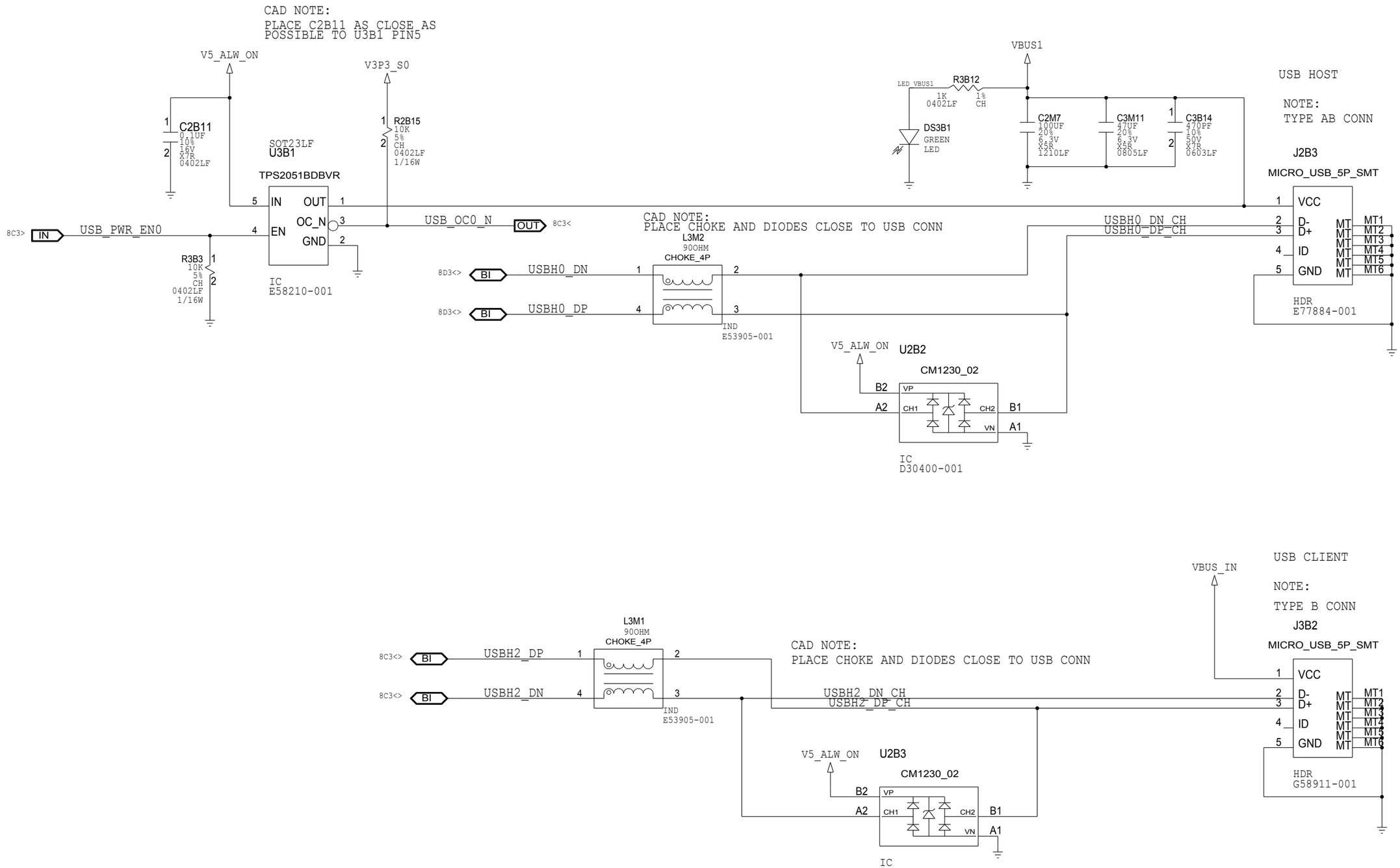

INTEL CORPORATION 2111 NE 25TH AVENUE HILLSBORO OR 97124	DOCUMENT NUMBER: G87171
TITLE: GALILEO USB CONNECTORS	REV: 1.0 SHEET 15 OF 27

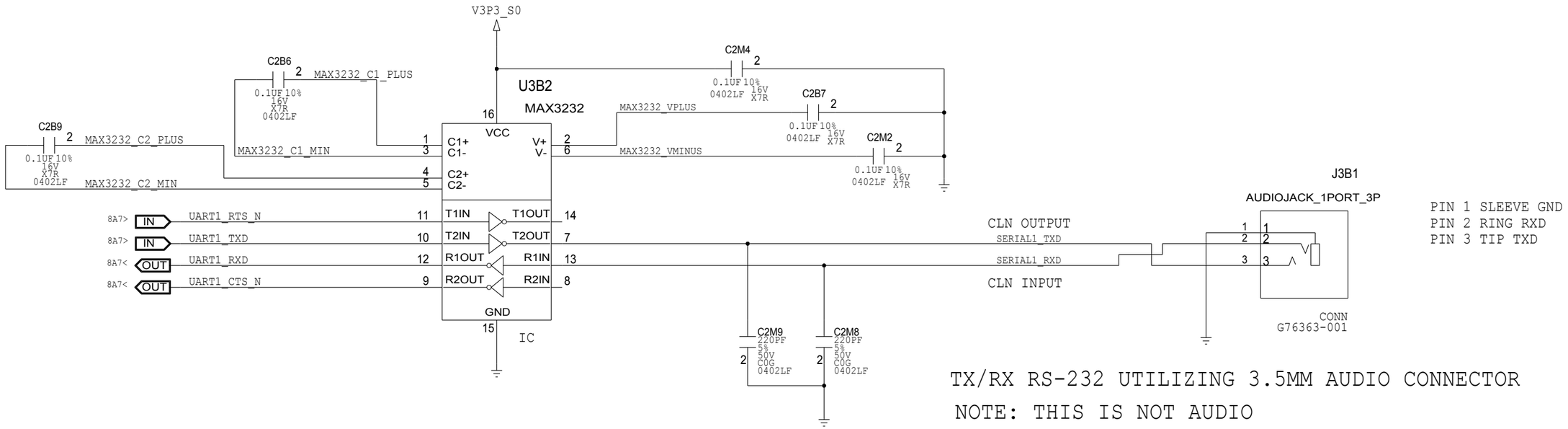

TX/RX RS-232 UTILIZING 3.5MM AUDIO CONNECTOR

NOTE: THIS IS NOT AUDIO

INTEL CORPORATION 2111 NE 25TH AVENUE HILLSBORO OR 97124	DOCUMENT NUMBER: G87171
TITLE: GALILEO UART 1	REV: 1.0 SHEET 16 OF 27

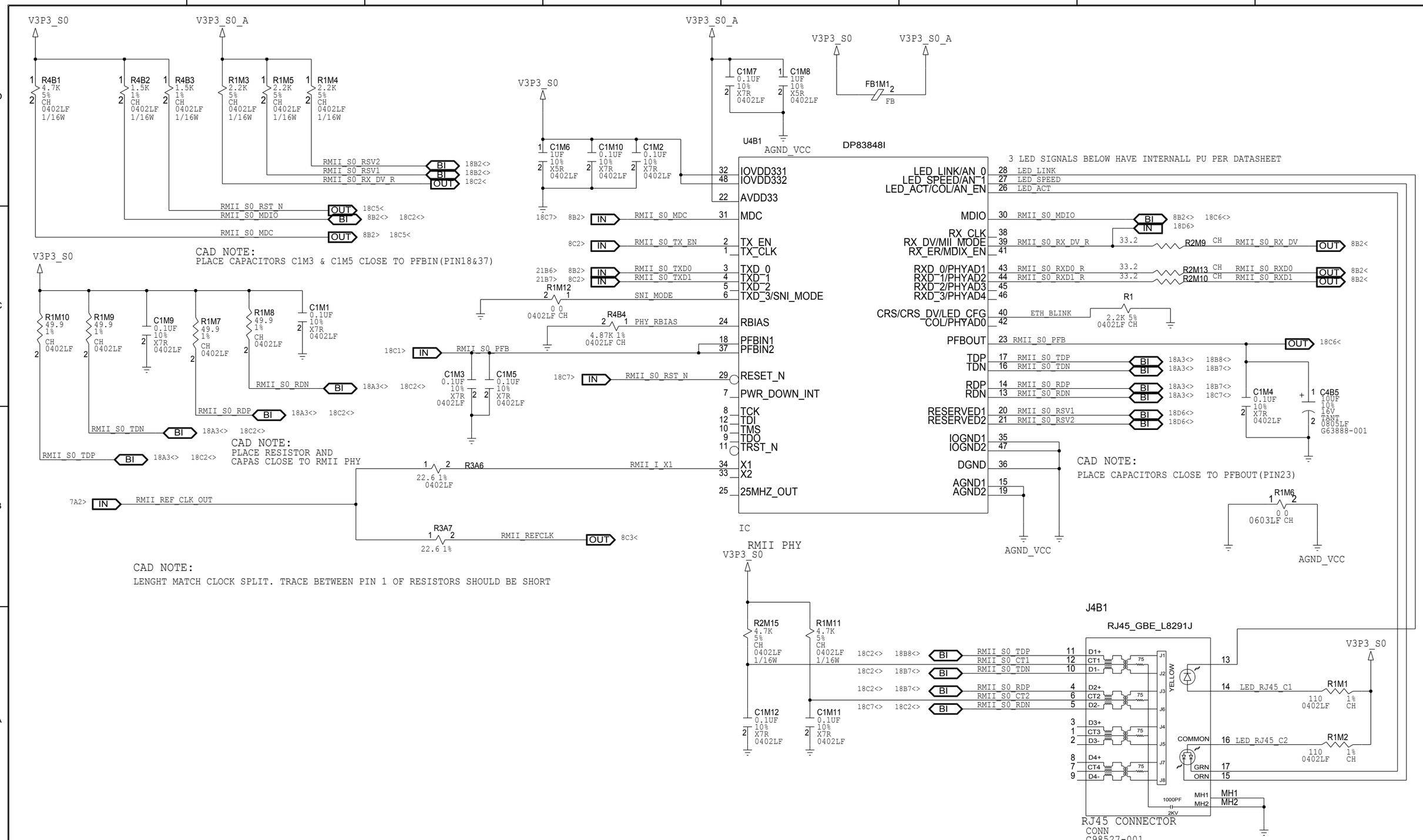

INTEL CORPORATION 2111 NE 25TH AVENUE HILLSBORO OR 97124	DOCUMENT NUMBER: G87171
TITLE: GALILEO LAN	REV: 1.0 — SHEET 17 OF 27

Order Number: 329682-001US

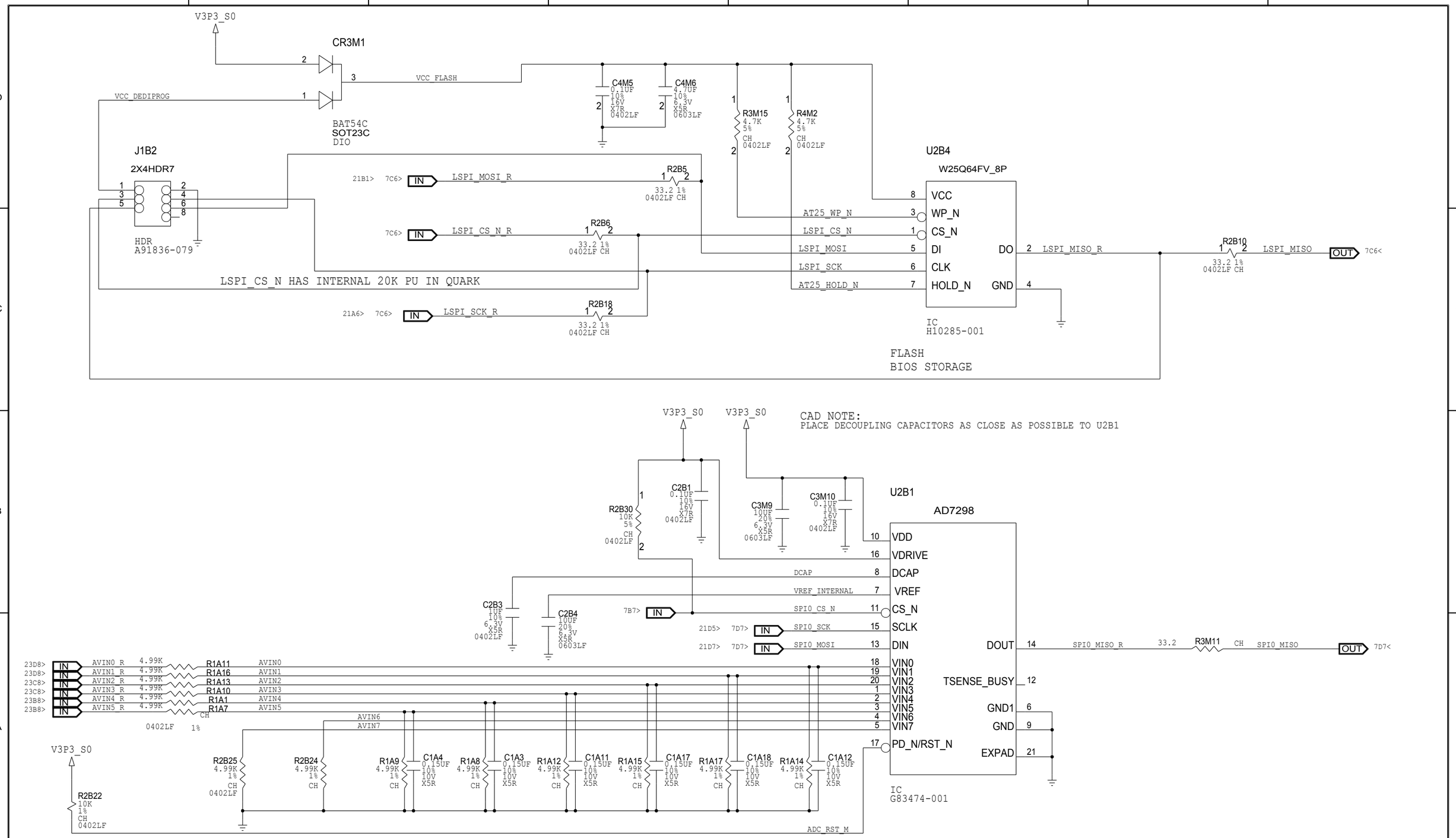

INTEL CORPORATION 2111 NE 25TH AVENUE HILLSBORO OR 97124	DOCUMENT NUMBER: G87171
TITLE: GALILEO SPI: ADC&FLASH	REV: 1.0 SHEET 18 OF 27

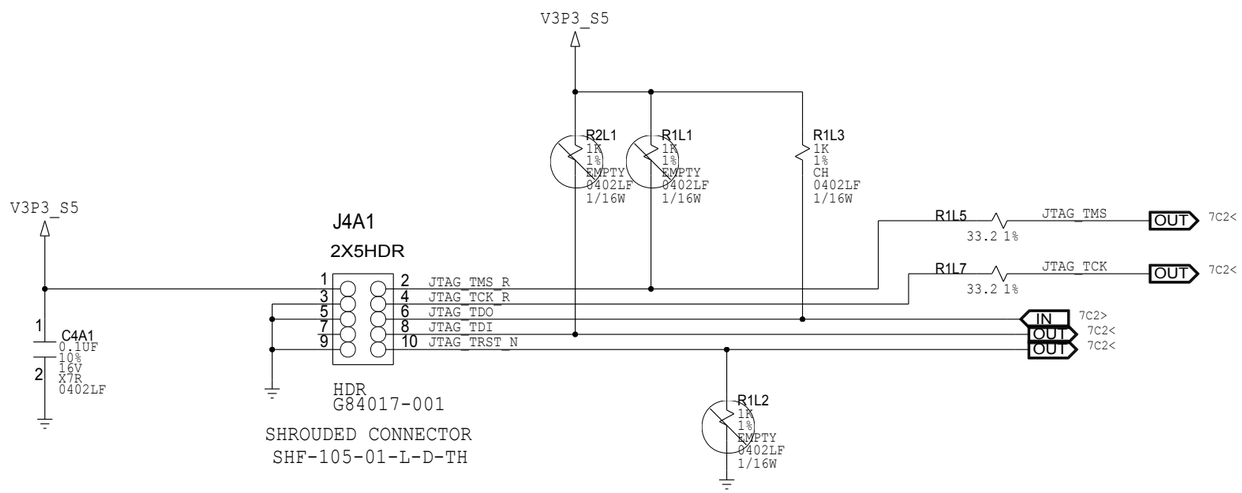

MINI-JTAG CONNECTOR

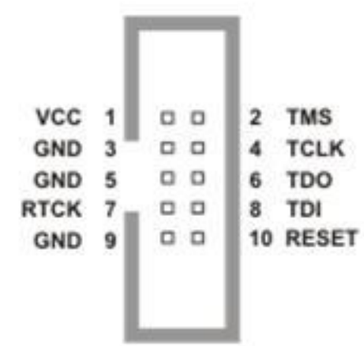

INTEL CORPORATION 2111 NE 25TH AVENUE HILLSBORO OR 97124	DOCUMENT NUMBER: G87171
TITLE: GALILEO I2CPROM & JTAG CONN	REV: 1.0 SHEET 19 OF 27

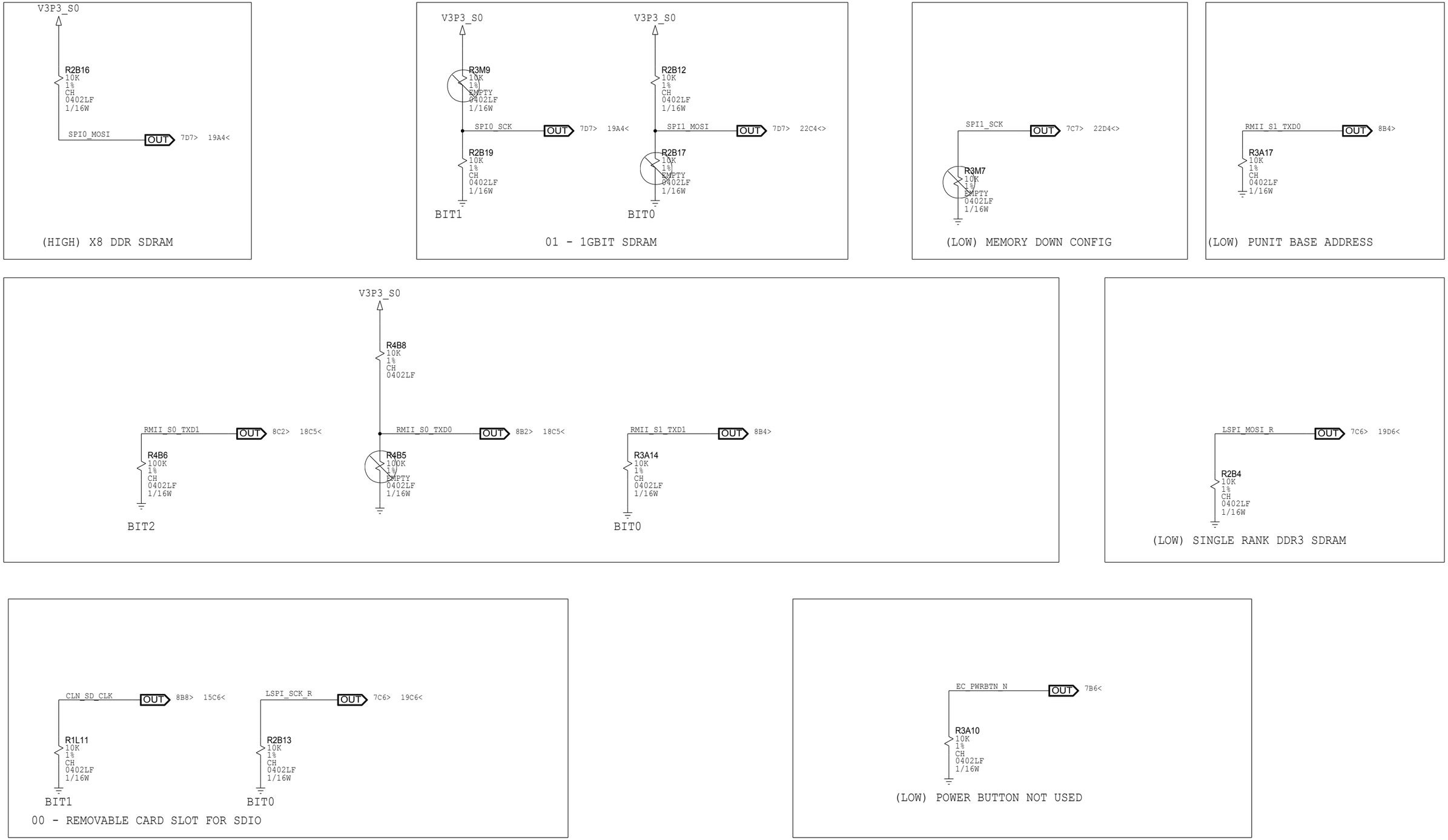

INTEL CORPORATION 2111 NE 25TH AVENUE HILLSBORO OR 97124	DOCUMENT NUMBER: G87171
TITLE: GALILEO QUARK STRAPS	REV: 1.0 SHEET 20 OF 27

Order Number: 329682-001US

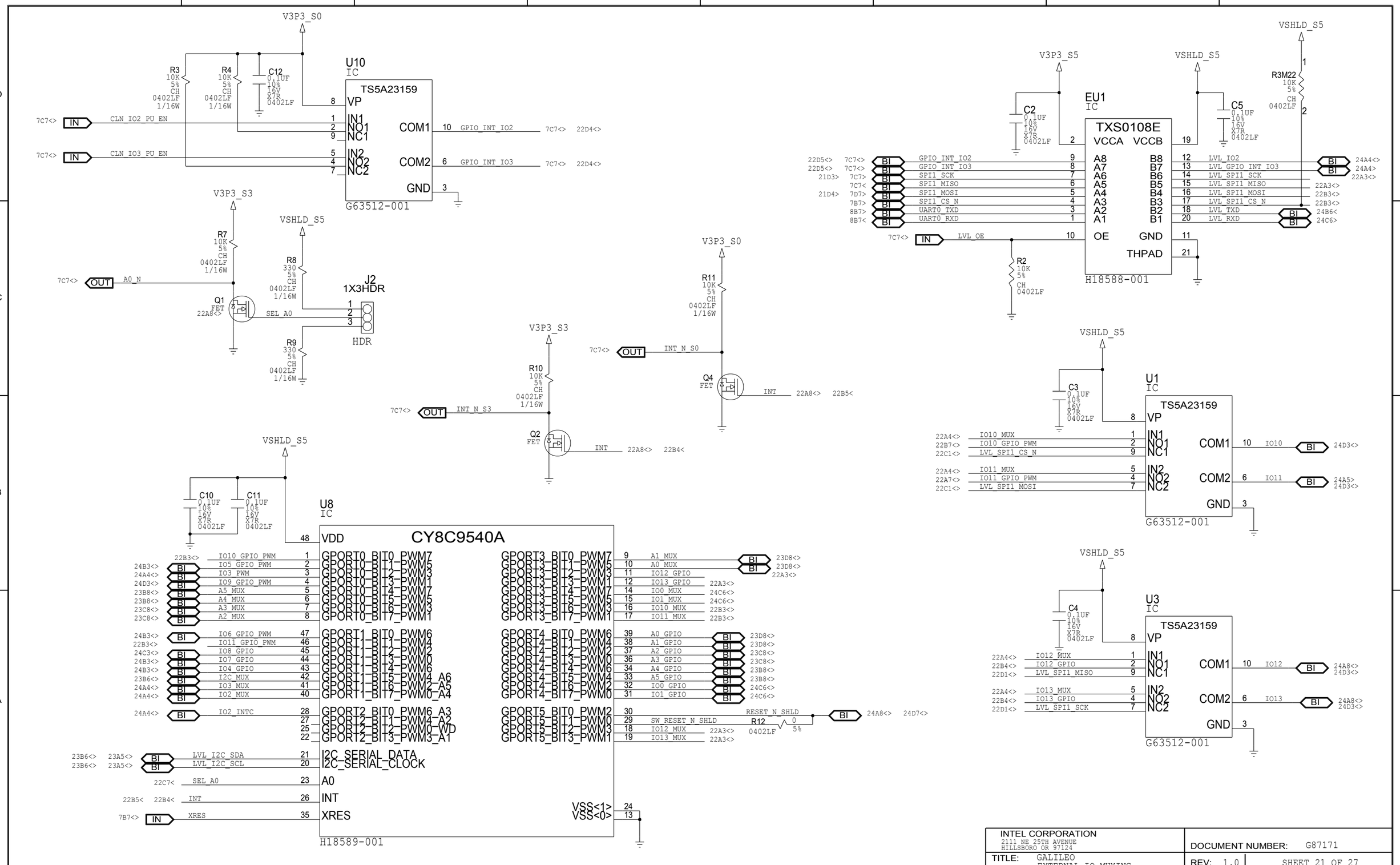

Order Number: 329682-001US

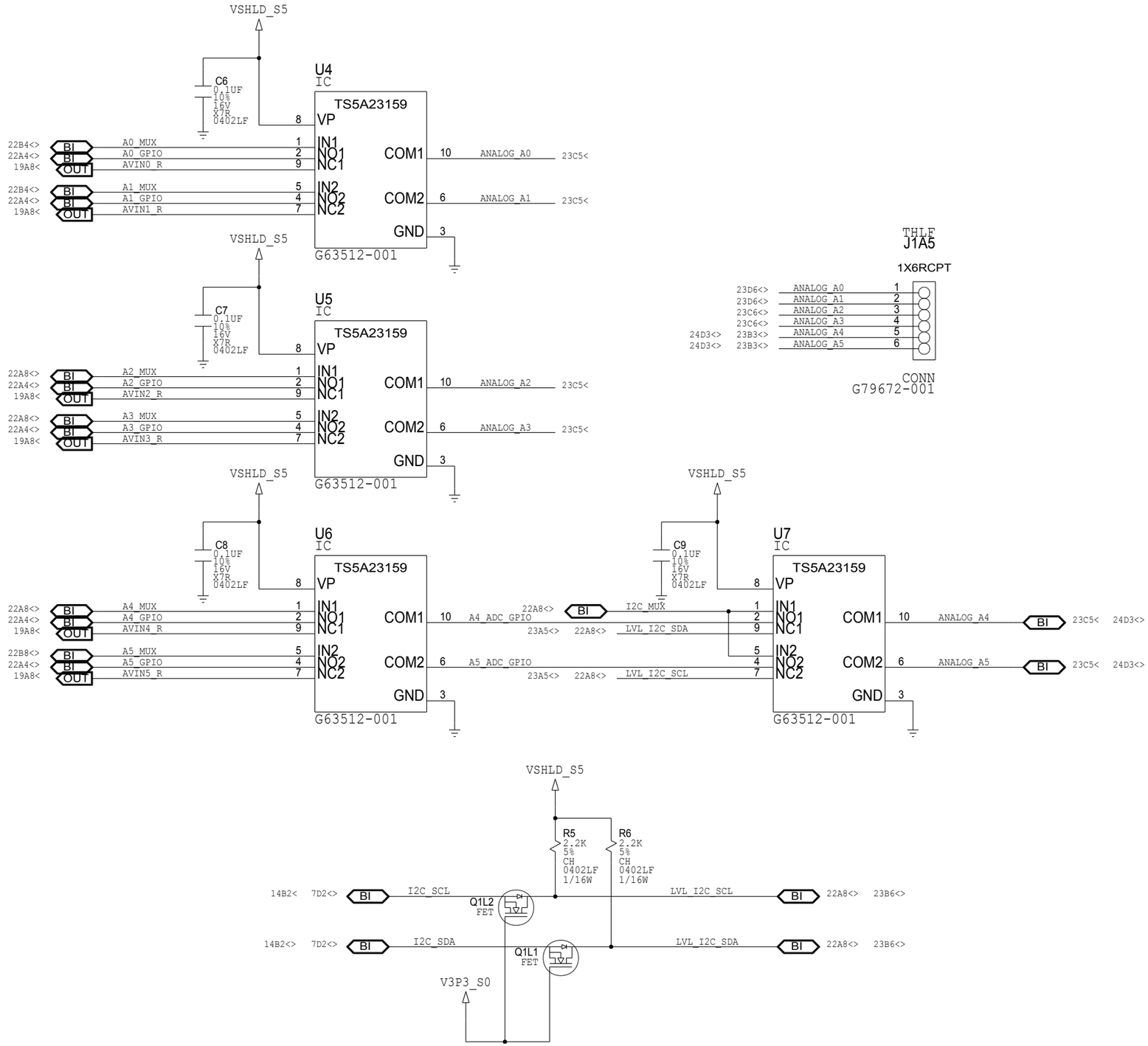

INTEL CORPORATION 2111 NE 25TH AVENUE HILLSBORO OR 97124	DOCUMENT NUMBER: G87171	
TITLE: GALILEO ANALOG CONNECTOR & MUXES	REV: 1.0	SHEET 22 OF 27

Order Number: 329682-001US

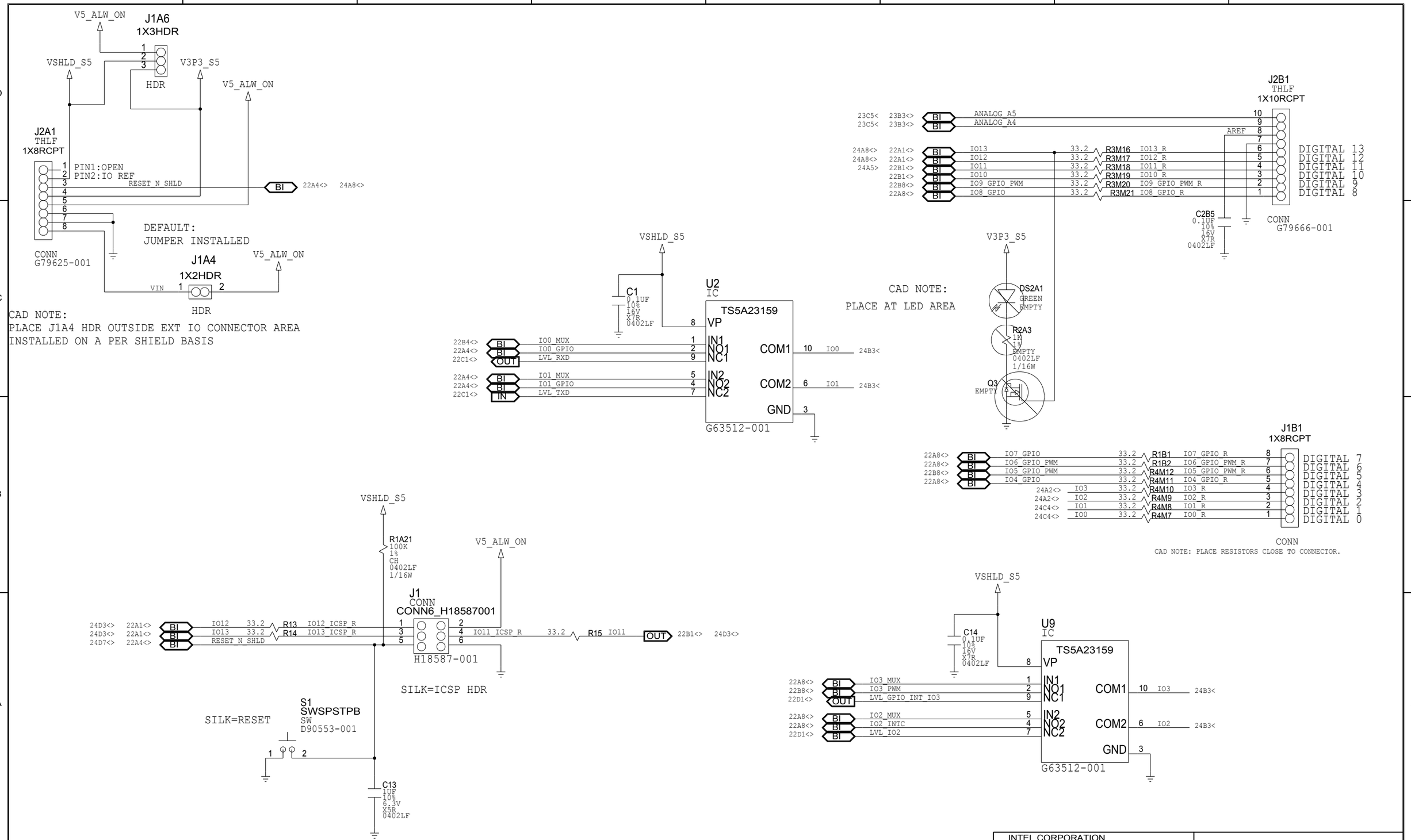

INTEL CORPORATION 2111 NE 25TH AVENUE HILLSBORO OR 97124	DOCUMENT NUMBER: G87171
TITLE: GALILEO EXTERNAL IO CONNECTORS	REV: 1.0 SHEET 23 OF 27

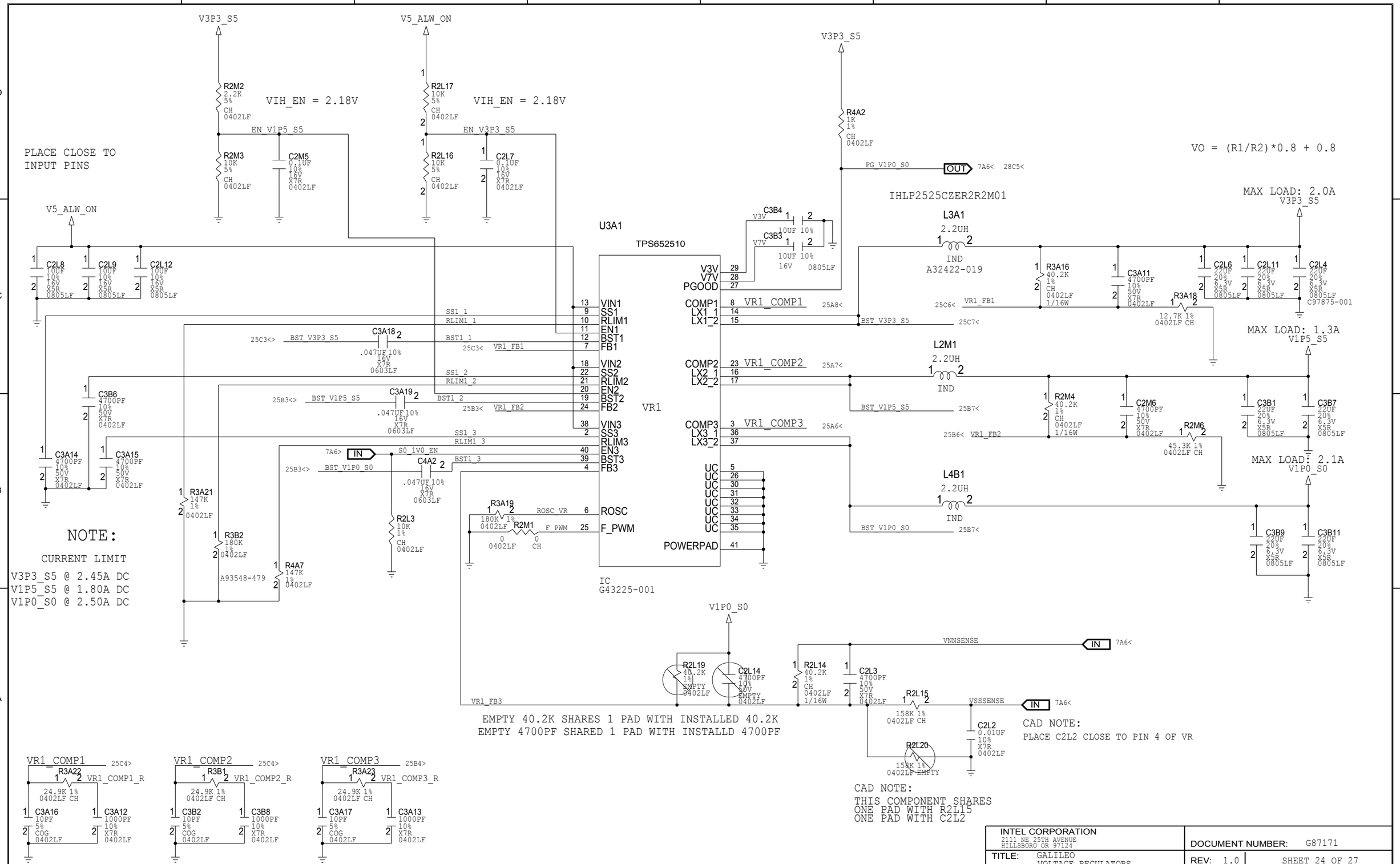

INTEL CORPORATION 2111 NE 25TH AVENUE HILLSBORO OR 97124	DOCUMENT NUMBER: G87171
TITLE: GALILEO VOLTAGE REGULATORS	REV: 1.0 — SHEET 24 OF 27

V3P3_S5 IS GENERATED W ON-BRD REGULATOR

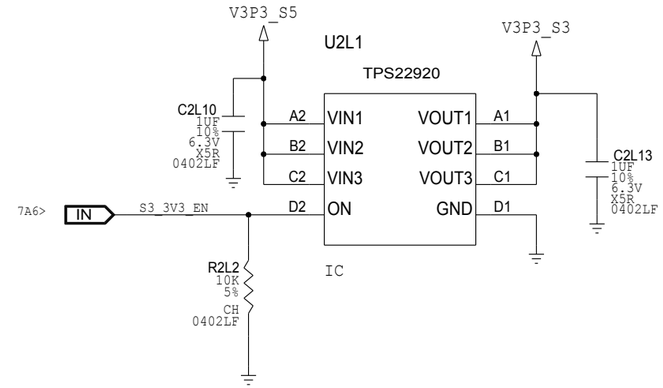

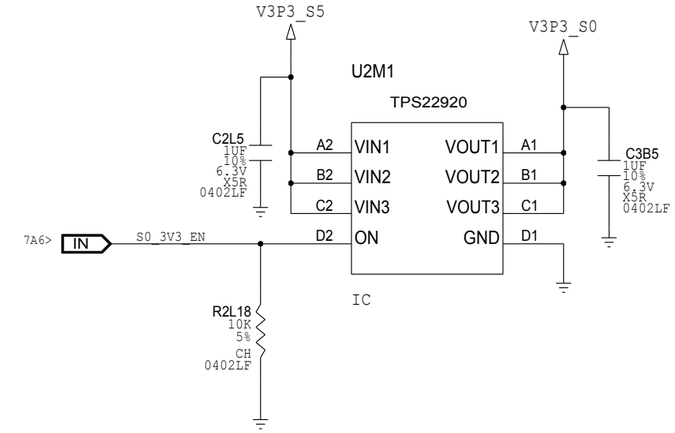

V1P5_S5 IS GENERATED W ON-BRD REGULATOR

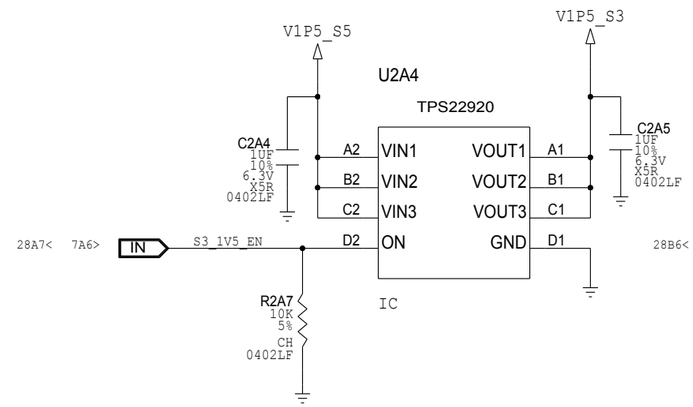

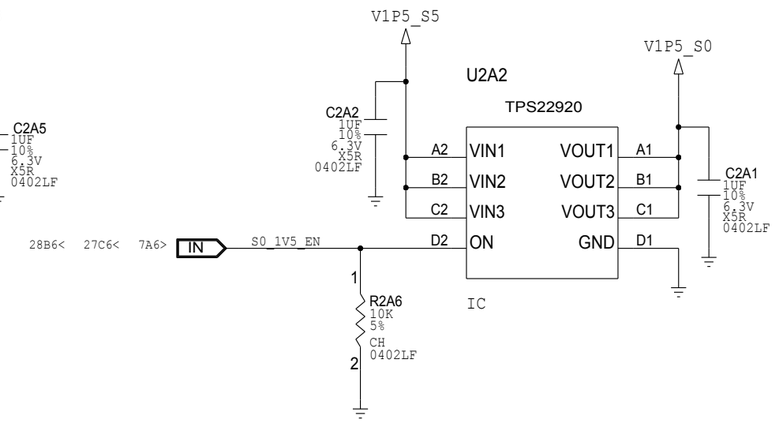

CAD NOTE:
PLACE DECOUPLING CAPS AS CLOSE AS POSSIBLE TO SWITCH PINS

V1P0_S5 IS GENERATED INTERNALLY

V1P0_S3 IS GENERATED INTERNALLY

V1P0_S0 IS GENERATED W ON-BRD REGULATOR

INTEL CORPORATION 2111 NE 25TH AVENUE HILLSBORO OR 97124	DOCUMENT NUMBER: G87171	
TITLE: GALILEO VOLTAGE REGULATORS	REV: 1.0	SHEET 25 OF 27

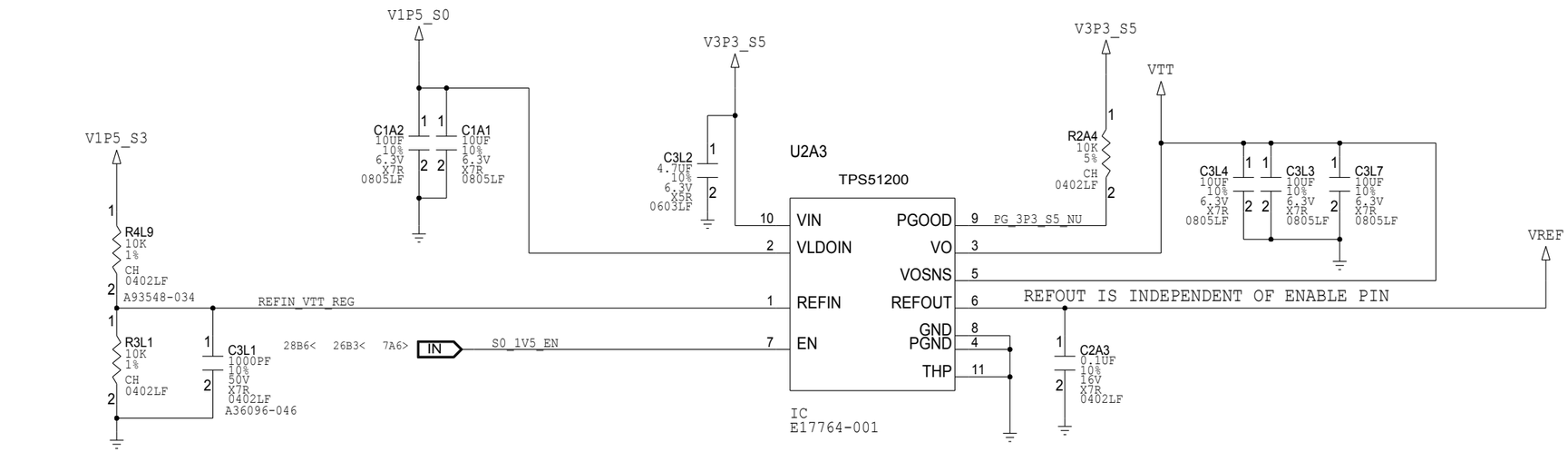

RECOMMENDED POWER SUPPLY:

X = TYPE OF BLADE. REFER TO DATASHEET
EMSA050300X P5P-SZ

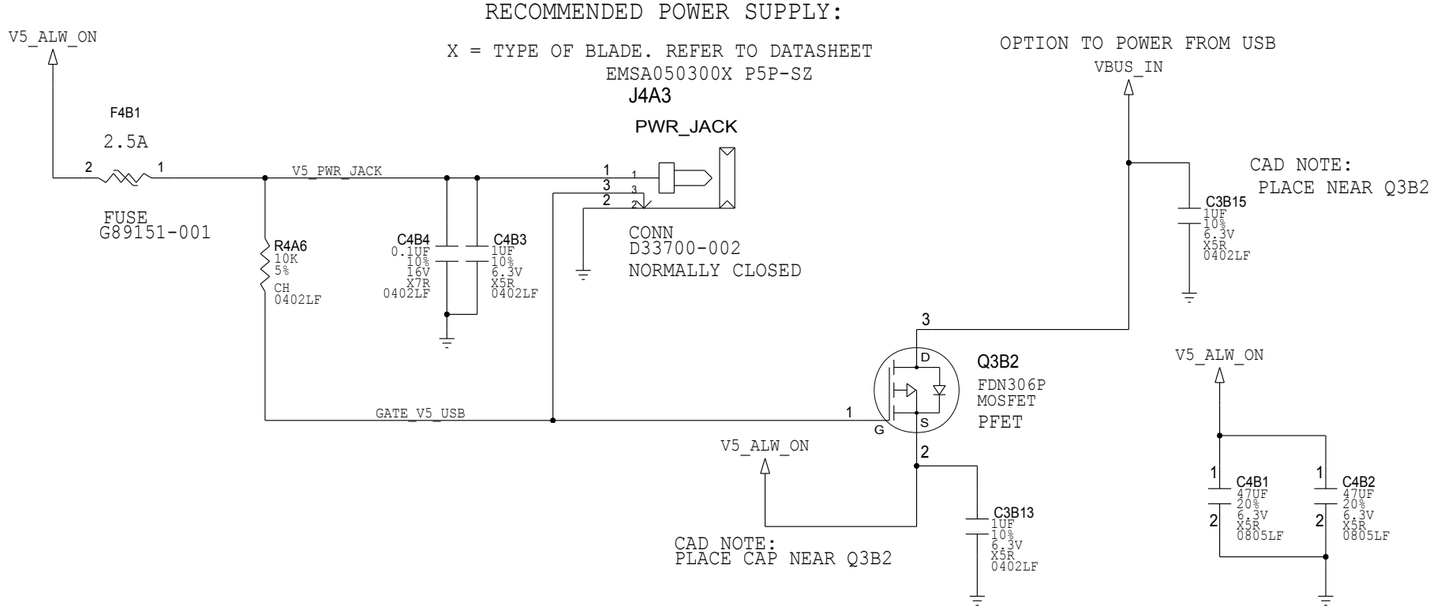

CONNECTOR TRUTH TABLE

PWR BRICK IN	PIN2&PIN3 DISCONNECTED	PIN3=PU TO 5V	V5_ALW_ON=BRICK PWR
PWR BRICK OUT	PIN2&PIN3 SHORTED	PIN3=GND	V5_ALW_ON=VBUS_IN

NOTE: RESET_N HAS AN INTERNAL PU TO V3P3_S3

SS:
REBOOT

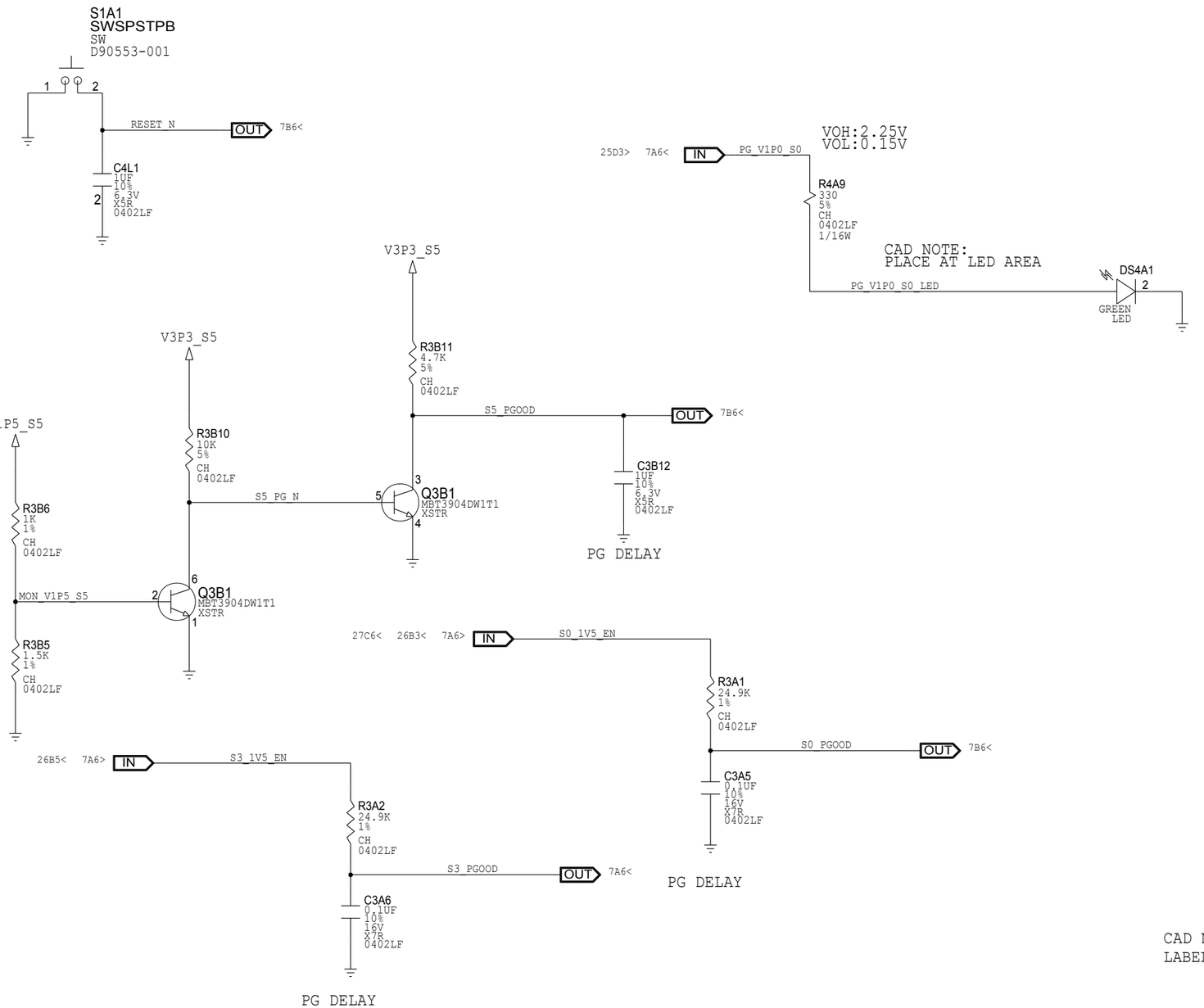

CAD NOTE:
LABEL "+" AND "-" TERMINALS ON 2 PIN HDR

OFF-BOARD BATTERY

INTEL CORPORATION 2111 NE 25TH AVENUE HILLSBORO OR 97124	DOCUMENT NUMBER: G87171
TITLE: GALILEO POWER BUTTONS & MISC	REV: 1.0 SHEET 27 OF 27

Order Number: 329682-001US